Shutdown Alarms

This illustrates the effective use of the Ground Not Run (GNR) function of the run buss. The application illustrated is a “Lights Left On” alarm, which will beep if the system is not running and the headlights are on.

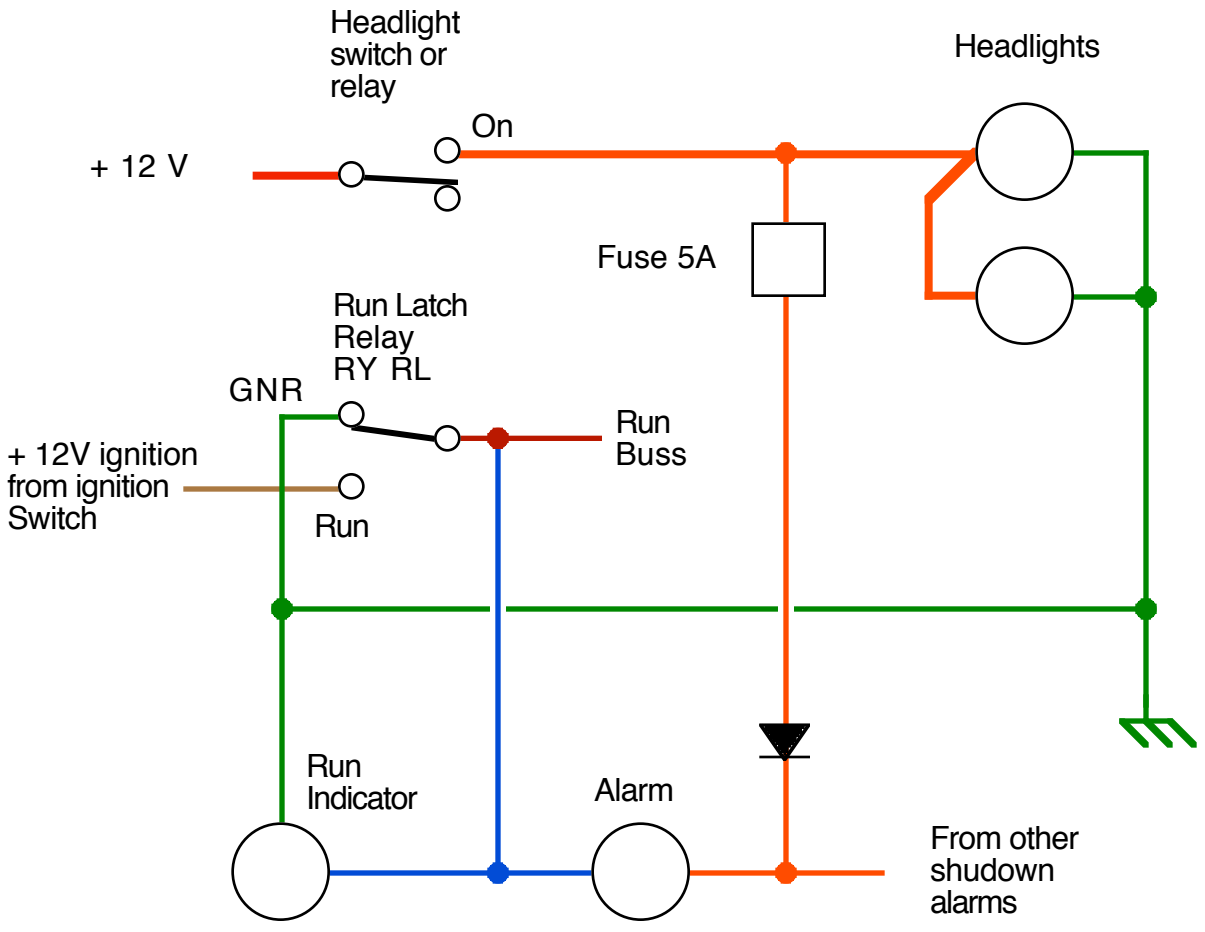

http://en.wikipidia.wiki/Image:WPEVShutdownAlarms.png
View for current image and notes
Wikipedia License cc-sa